Delayed mode correction of radiometry in BGC-Argo floats

Quentin Jutard, Emanuele Organelli, Hervé Claustre, Catherine Schmechtig, Emmanuel Boss, Fabrizio d'Ortenzio, Xiaogang Xing, Nathan Briggs

November 30 2020

State of the radiometry QC

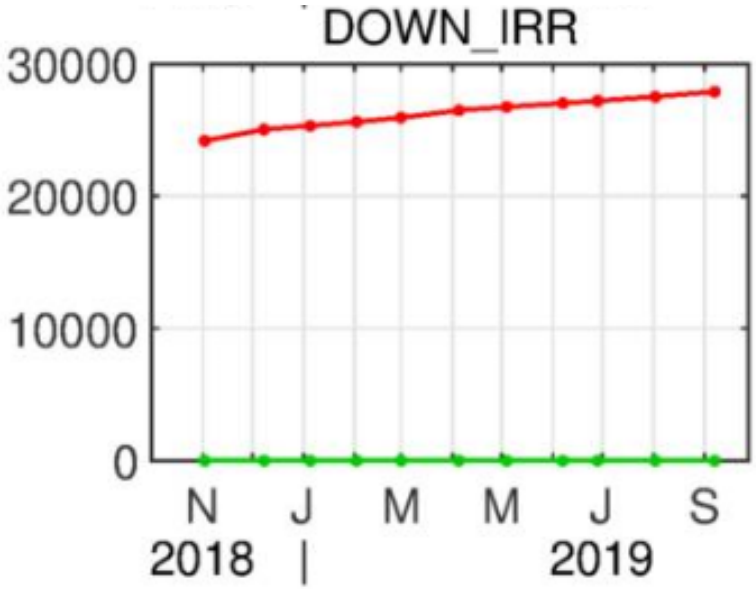

- Until recently, all radiometry profiles **only received RTQC**, which is a range test
- A method has been developed in Organelli et al., 2016 [2] which focused on filtering **environmental effects** (clouds, wave focusing...)
- Here the DM will just focus on potential **sensor issues**, especially in the dark part of profiles

Error sources in radiometry sensors

Sensor temperature effects

- It has been highlighted that radiometers are sensible to **temperature**. [ADMT19] [4]
- A method has been proposed to reconstruct **sensor temperature** from TEMP in core files. [ADMT19] [4]
- Xiaogang Xing and Nathan Briggs recommended to use **night profiles** to estimate temperature effects on radiometers.

Sensor drift

- The dark response of radiometers can **drift over time**.
- We found that **measurements during float drift** at 1000dbar (can be found in trajectory files) are extremely useful to correct sensor drift.

Both effects are **relatively small** and only significantly impact the near dark part of profiles. We assumed that the errors that are introduced are equivalent to two **offsets** that are respectively dependent on sensor temperature and on time.

Data availability

We selected all dead coriolis floats with a radiometer, which means **131 floats** for a total of **24207 profiles**. A large portion (55/131 or 42%) of these floats have acquired regular drift data and at least one night profile.

	At least one night profile	**No night profile**	Total
Sufficient drift data	55	11	66
Not enough drift data	41	24	65
Total	96	35	131

In order to attempt a correction for all floats, we developed **alternative DM methods** based on the dark part of profiles. This dark part is detected following *Organelli et al., 2016* [2].

Correction steps

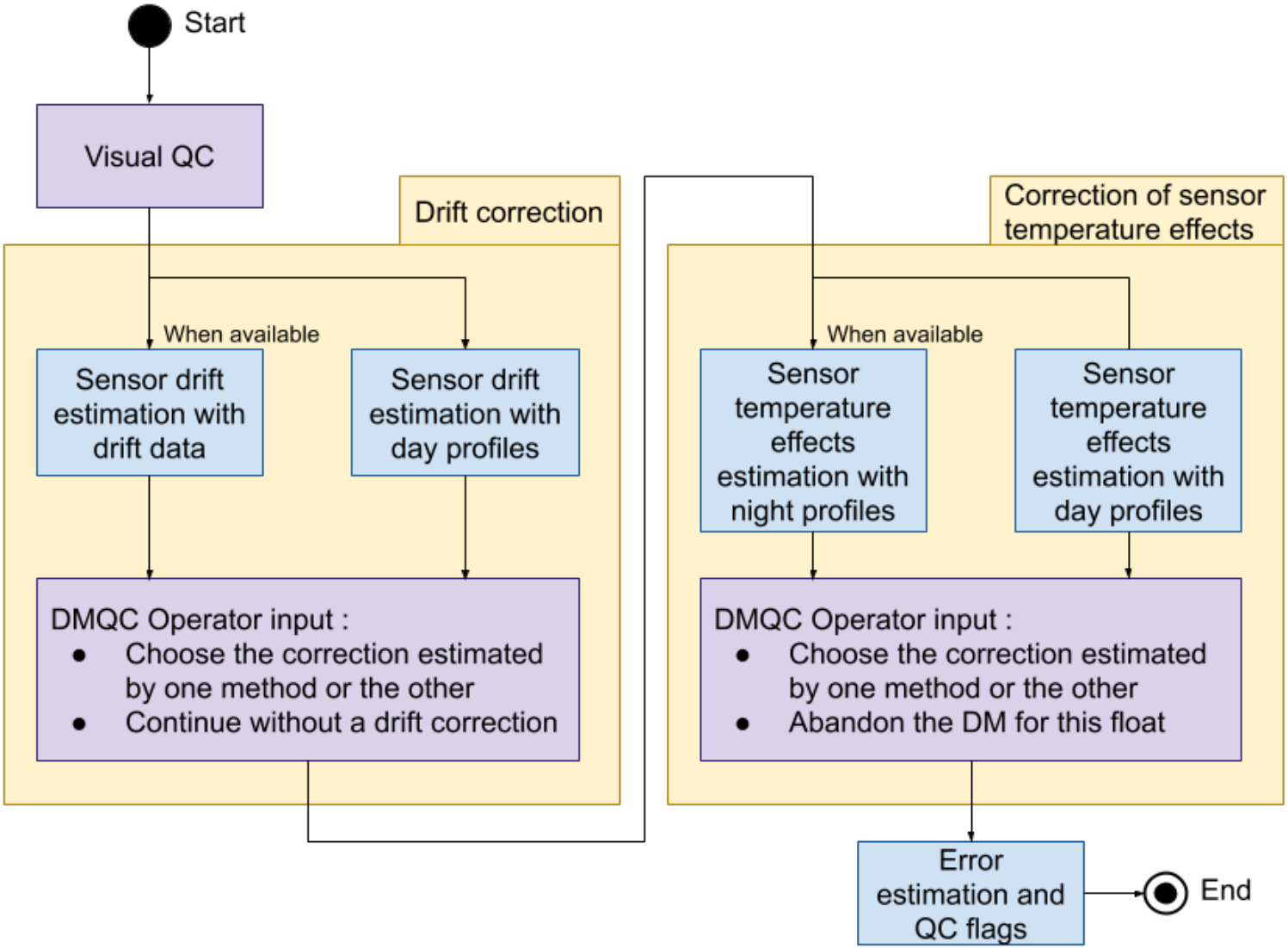

Flags definition and error estimation

Flags

- Start with the QC flags after the visual QC
- The flags in the dark part of profiles (detected following Organelli) are changed to **2**
- Values that were flagged **3** or **4** in the non corrected profile are changed to **4**
- Levels with a pressure QC of **3** or **4** are flagged **4**
- Levels without a sensor temperature matchup are flagged **4**

Errors

- Errors are estimated as the maximum between a **constant value** and a **relative error** (proportional to the corrected parameter)
- For **Ed parameters** the constant value is $2.5 \times 10^{-5} W/m^2/nm$ and the relative error is 2% [1]
- For **PAR** the constant value is $0.03 \mu mol/m^2/s$ and the relative error is 5% [3]

Metadata

SCIENTIFIC_CALIB_COMMENT = "PARAMETER dark correction. Uses JULD to correct drift and SENSOR_TEMP to correct temperature variance. SENSOR_TEMP is reconstructed from the TEMP axis of the core file following [https://doi.org/10.13155/62466]"

SCIENTIFIC_CALIB_EQUATION = "PARAMETER_AJUSTED = PARAMETER - A - B*SENSOR_TEMP - C*JULD - Q*JULDˆ2"

SCIENTIFIC_CALIB_COEFFICIENT = "A = xxxx, B = xxxx, C = xxxx, Q = xxxx"

Profile 6901474_006 (in the North Atlantic gyre)

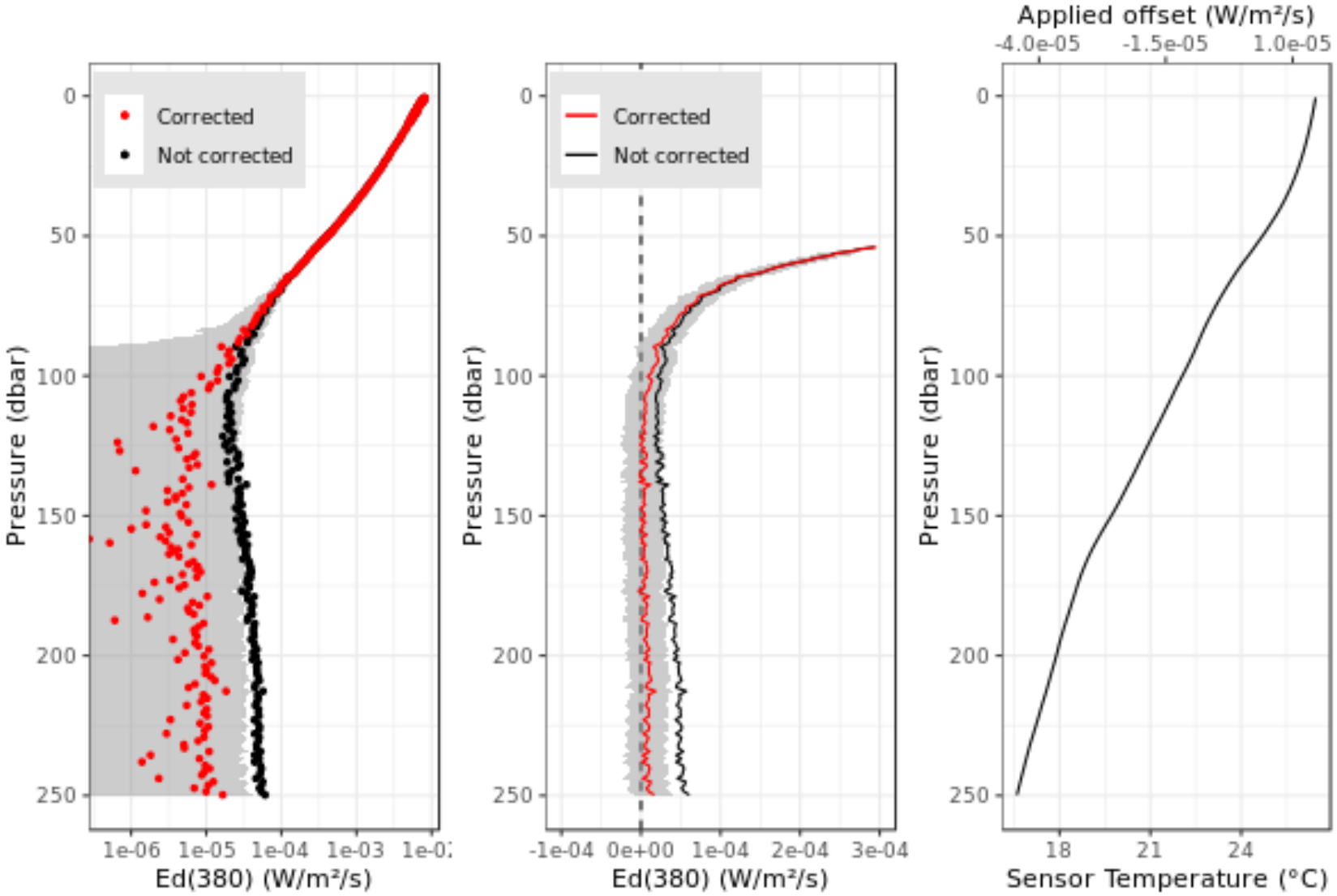

Success rate

We have not yet tried all of our set of 131 dead floats, only 95 of them. The success rate of our process largely depends on the availability of drift data and night profiles, especially the latter.

	At least one night profile	**No night profile**	Total
Sufficient drift data	40/41 (98%)	2/7 (29%)	42/48 (88%)
Not enough drift data	17/31 (55%)	4/16 (25%)	21/47 (45%)
Total	57/72 (79%)	6/23 (26%)	63/95 (66%)

We strongly recommend to **acquire radiometry measurements in drift** (at least one per day) and **regular night profiles** (at least one per year, during the season with the largest temperature range, and ideally without moon).

Number of profiles

The floats with a successful correction are generally the ones with **more profiles**. We corrected **66%** of the 95 floats we tried, but **80%** of the 18085 profiles.

	n floats	n profiles	n prof/n floats
Corrected floats	63	14465	∼230
Not corrected floats	32	3620	∼113

A few floats measured a large number of profiles yet could not be confidently corrected with our method. It is likely that we could find a correction with some tailored work, for example :

- **7900591** (266 profiles) : Not much data for temperature correction (in night or day), but the drift data is clean and it may be enough to only correct drift.
- **6901485** (179 profiles) : Drift is available but shows that the behaviour of the float changed around the middle of its life. We could probably greylist the problematic section and correct the rest in two parts.

GDAC data state changes

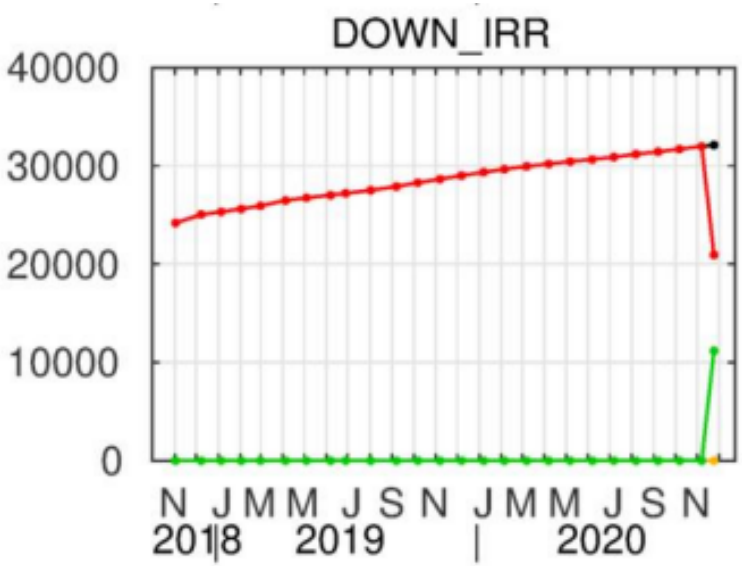

- More than **10000** profiles have already been corrected in Delayed mode and sent
- About 4000 more are ready to be sent
- If the success rate of 80% holds, we expect that we will have corrected a total of around **19000 profiles** in the coming weeks

Matti Mõttus, Madis Sulev, Baret Frederic, R. Lopez-Lozano, and Anu Noorma. *Photosynthetically Active Radiation: Measurement and Modeling*, pages 7970–8000.
01 2011.

Emanuele Organelli, Hervé Claustre, Annick Bricaud, Catherine Schmechtig, Antoine Poteau, Xiaogang Xing, Louis Prieur, Fabrizio D'ortenzio, Giorgio Dall'Olmo, and Vincenzo Vellucci.
A novel near-real-time quality-control procedure for radiometric profiles measured by bio-argo floats: protocols and performances.
Journal of Atmospheric and Oceanic Technology, 33(5):937–951, 2016.

Kenneth J Voss, Scott McLean, Marlon Lewis, Carol Johnson, Stephanie Flora, Michael Feinholz, Mark Yarbrough, Charles Trees, Mike Twardowski, and Dennis Clark.
An example crossover experiment for testing new vicarious calibration techniques for satellite ocean color radiometry.
Journal of Atmospheric and Oceanic Technology, 27(10):1747–1759, 2010.

Xiaogang Xing and José Lagunas-Morales.
Laboratory results on the dependence of dark current upon environmental temperature variability for satlantic's ocr504 radiometers.
In *Optical Precision Manufacturing, Testing, and Applications*, volume 10847, page 108470B. International Society for Optics and Photonics, 2018.